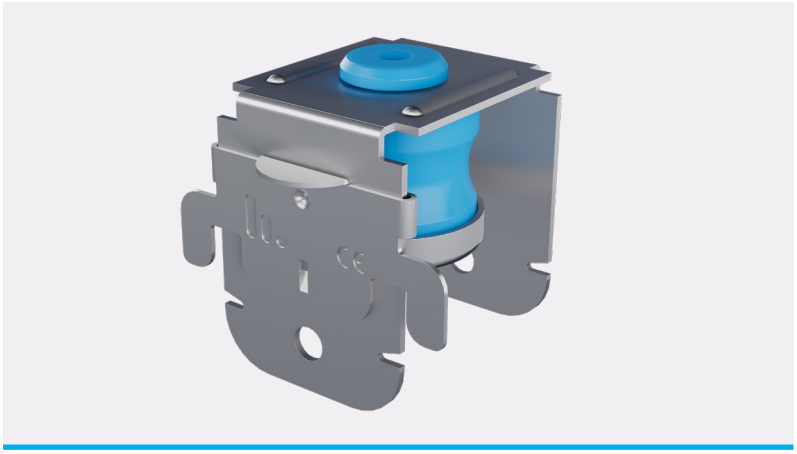

stravilink
by CDM Stravitec

SCAN ME

Scan here for access to solution website page for other documents

Stravilink CC40-P

Datasheet

Stravilink CC40-P is a Channel Clip using elastomeric Pads, designed for suspending acoustic ceilings with 47 mm steel ceiling channels and optimising sound insulation between vertically arranged rooms.

BENEFITS

- Suitable for installation on various structures, including concrete and cross-laminated timber (CLT) slabs
- Designed to be compatible with 47 mm galvanized steel ceiling channels
- Equipped with elastomeric pads featuring a natural frequency around 8 Hz at design load
- Color-coded pad options available, supporting loads from 10 to 78.5 kg
- Requires a minimum void depth of 65 mm. Variable void depth is possible
- The elastomeric pad extends beyond the metal clip, preventing direct contact with the soffit when fixed to the ceiling
- Includes a safety clip to prevent ceiling channel deformation due to excess weight
- Effortless snap-in design lets the hanger quickly and securely attach to the ceiling channel
- No specialized tools are required for installation
- Simple and fast installation process
- Cost-effective solution

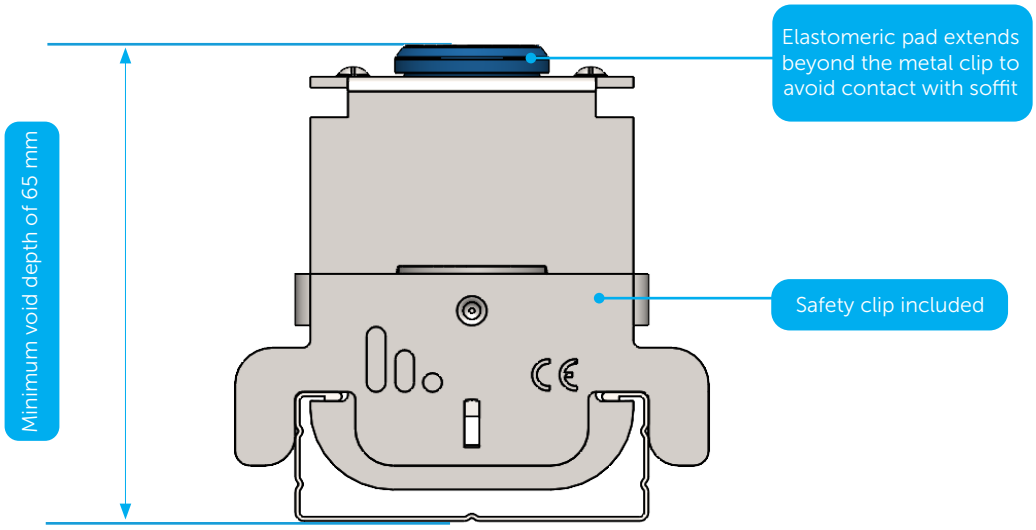

PACKAGING

Model	Reference	Quantity per Box	Weight per Box [kg]	Dimension of Box [cm]
Stravilink CC40-P240	001961	75	9.26	29 x 23.5 x 17.2
Stravilink CC40-P360	001962	75	9.30	29 x 23.5 x 17.2
Stravilink CC40-P625	001963	75	9.30	29 x 23.5 x 17.2

Version 3 | 06/07/2026 - All information provided in this document is subject to legal disclaimers. © 2026 CDM Stravitec nv. All rights reserved.

PHYSICAL & MECHANICAL PROPERTIES

Model	Design Load		Resonance Frequency at Design Load	Load Range (per Hanger)		Pad Colour
	kg	N	Hz	kg	N	
Stravilink CC40-P240	24	240	7.5	10 - 30	100 - 300	Sky Blue
Stravilink CC40-P360	36	360	8.5	20 - 45	200 - 450	Silver Grey
Stravilink CC40-P625	62.5	625	9.0	30 - 78.5	300 - 785	Dark Blue

Notes:
Admissible load of steel elements: 937 N.
Products are suited up to a C2 environment (atmosphere with little or no degree of pollution).
The temperature range of use is between -30°C and 70°C.
To assess which type is appropriate the following information is needed:
1) The weight and construction of the supported ceiling - this will determine the type of hanger;
2) The weights and support locations of any items hung from the ceiling.

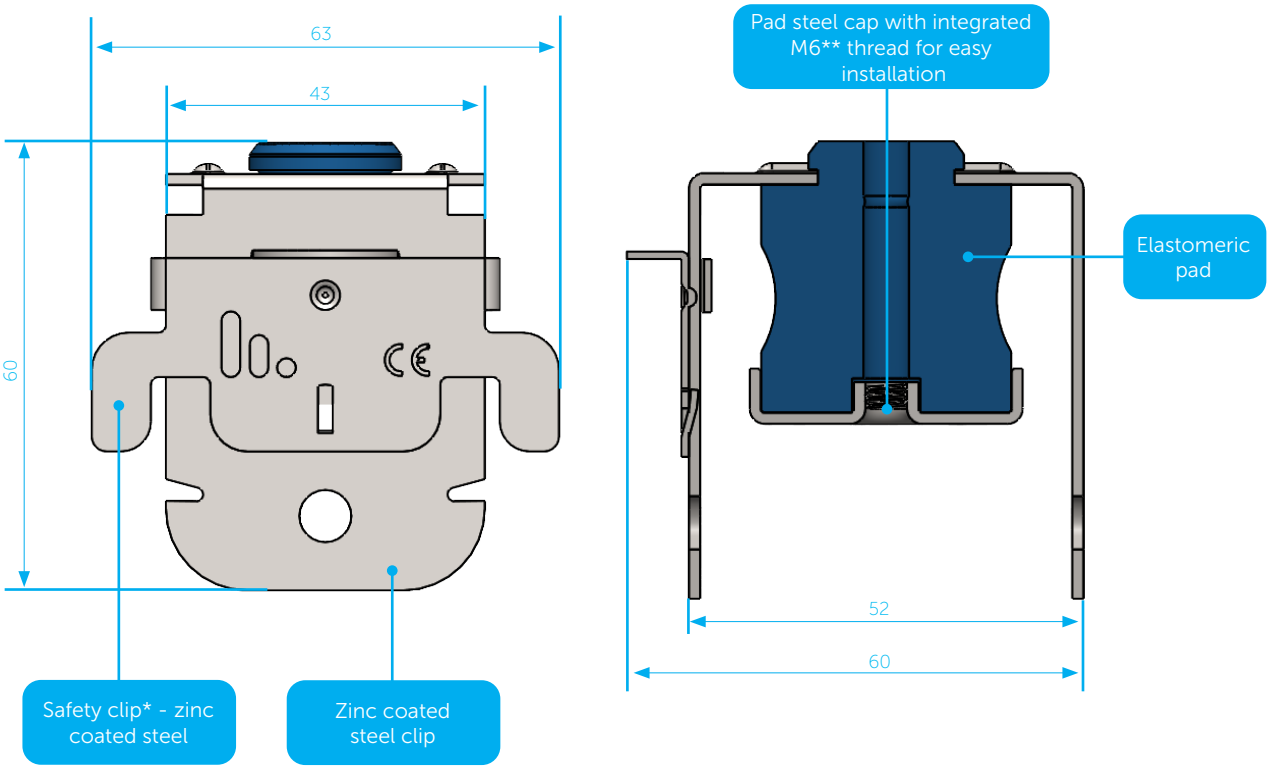

Notes:
All dimensions in milimeters (mm).
*Available with double safety clip, upon request.
**Available in M8, upon request.

Version 3 | 06/07/2026 - All information provided in this document is subject to legal disclaimers. © 2026 CDM Stravitec nv. All rights reserved.

PERFORMANCE GRAPHS

Deflection as Function of Load

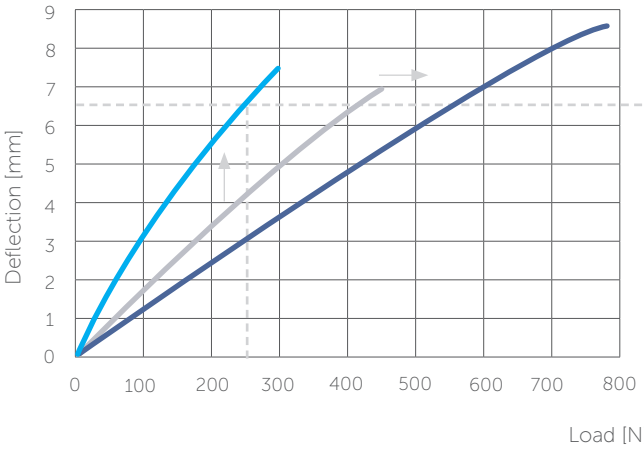

Deflection as Function of Frequency

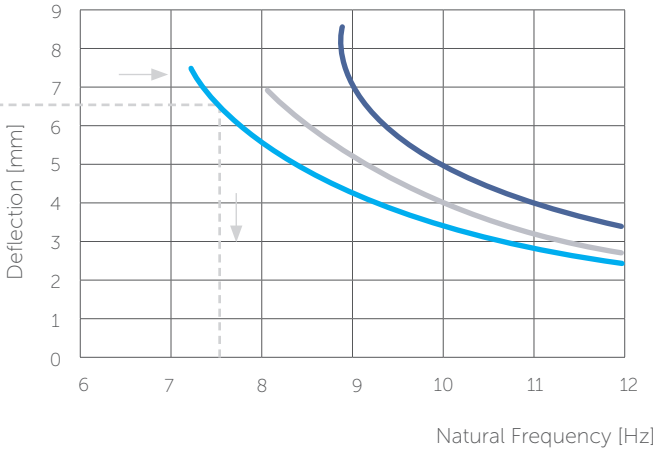

Stravilink CC40-P240 Stravilink CC40-P360 Stravilink CC40-P625

The natural frequency of a Stravilink CC40-P hanger can be determined by its load. To start the calculation use the graph "Deflection as function of load" this will provide the deflection at the specified load. Then moving horizontally to the right hand side plot "Deflection as function of frequency" on which the corresponding resonance frequency can be found. As an example, the natural frequency of a Stravilink CC40-P240 loaded with 250 N is determined. The corresponding deflection is 6.5 mm. The natural frequency of the pad at 6.5 mm deflection is 7.5 Hz.

Version 3 | 06/07/2026 - All information provided in this document is subject to legal disclaimers. © 2026 CDM Stravitec nv. All rights reserved.

ACCESSORIES

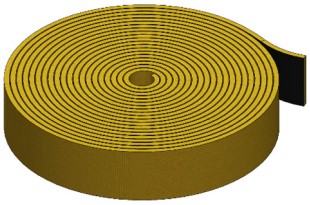

Perimeter Strip

Self-adhesive perimeter strip 10 mm thick to isolate the ceiling from the adjacent walls.

Note: Standard widths of 50 mm, 100 mm, and 150 mm are available in 10 lm rolls.

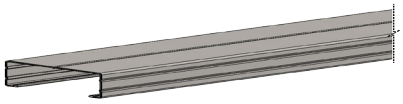

C47 channel

47 mm wide channel of 3 m available
Material: DX51D+Z140
Weight: 1.34 kg

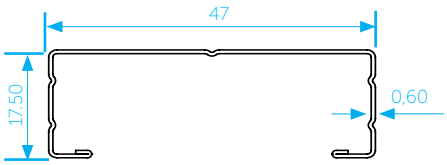

Note: All dimensions in milimeters (mm).

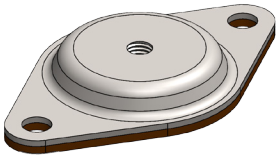

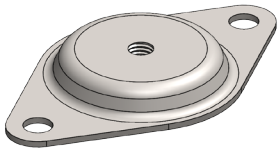

M6 anchor plate

Available with (for settlement on rough surfaces) or without rubber (2 mm)
Material: DX51D+S275
Admissible load of steel element: 3090 N

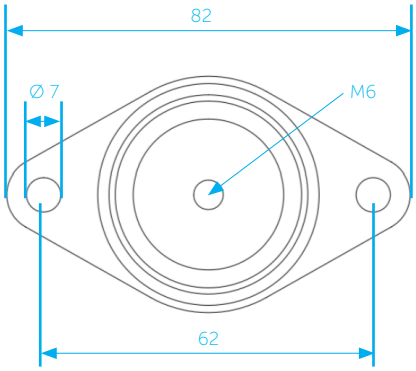

Note: All dimensions in milimeters (mm).

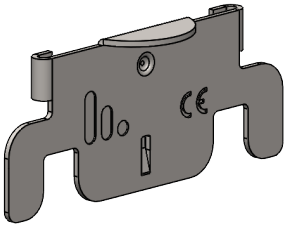

Stravilink CC40 safety clip

Material: DX51D+S275
Quantity per bag: 25
Note: One safety clip is included with the product by default.
A second is available upon request.

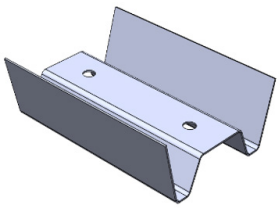

Channel-47 connector

Used to join two sections of channel in ceiling systems, for 47 mm ceiling channels.
Weight: 26 g
Quantity per box: 100
Material: DX51D+Z140

All accessories listed on our Stravilink solution datasheets are not included by default with the standard solution.
These are necessary or optional installation accessories that can be supplied by CDM Stravitec upon request, but at an additional cost.

Version 3 | 06/07/2026 - All information provided in this document is subject to legal disclaimers. © 2026 CDM Stravitec nv. All rights reserved.

Single ceiling profile and increased void

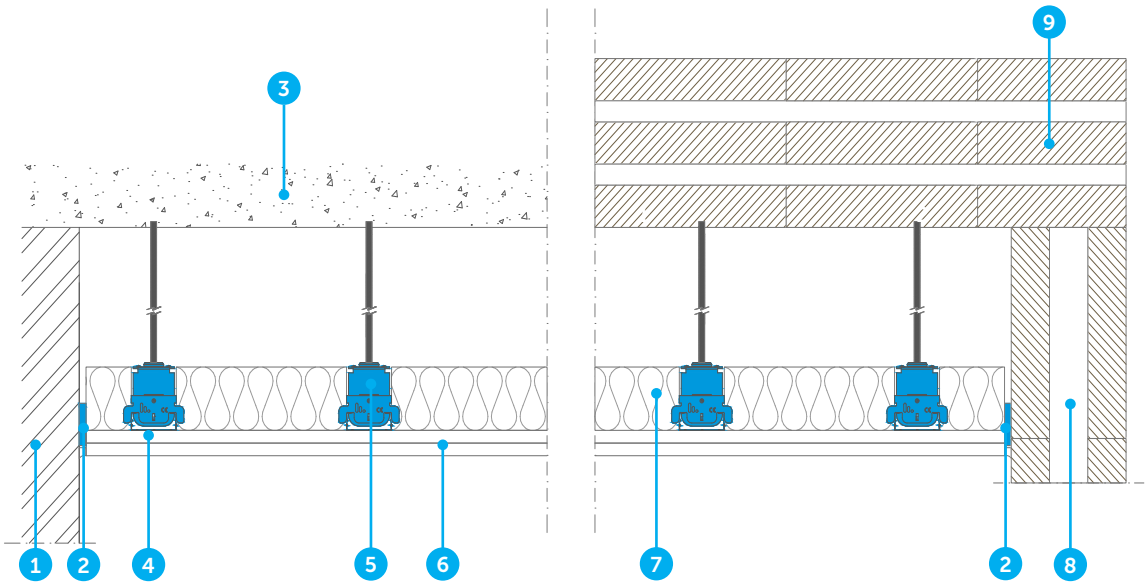

Single ceiling profile and reduced void

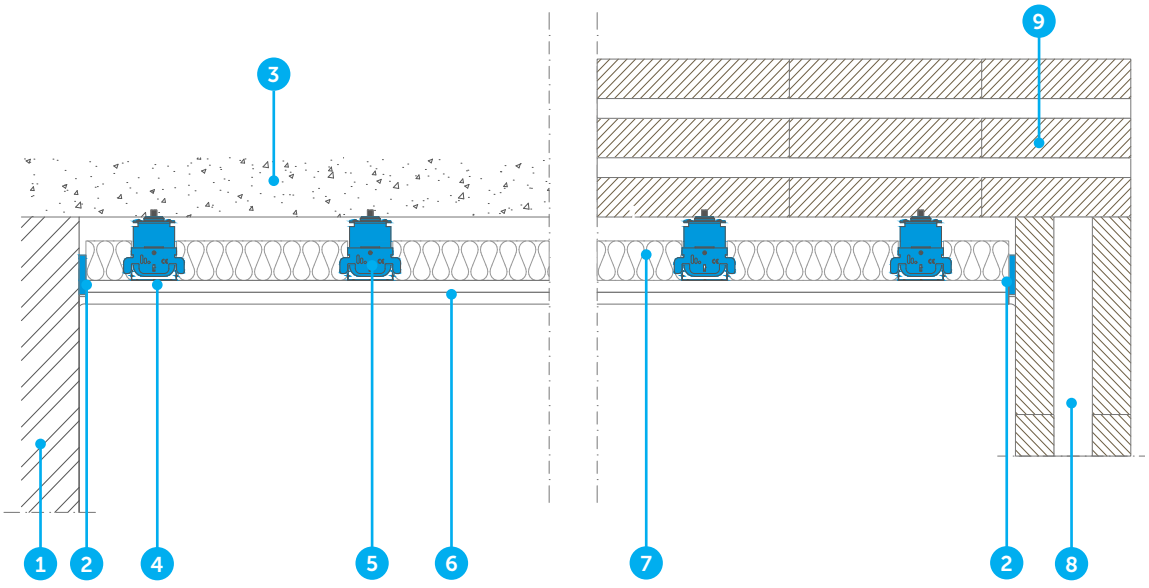

1. Wall
2. Perimeter Strip
3. Structural reinforced concrete slab
4. 47 mm channel
5. Stravilink CC40-P
6. Plasterboards, gypsum board or dry lining
7. Absorption layer
8. CLT Wall
9. CLT Slab

Version 3 | 06/07/2026 - All information provided in this document is subject to legal disclaimers. © 2026 CDM Stravitec nv. All rights reserved.

ACOUSTIC RESULTS

Test Setup 1

1. 140 mm concrete base slab
2. 100 mm void
3. Stravilink CC60-P[1] clips [on grid of 567.5 x 1200 mm]
4. 60 mm mineral wool
5. 2x layers 12.5 mm gypsum boards

[1]Uses the same elastomeric pads as Stravilink CC40-P

Setup	$L_{n,w}$ (C_i)	ΔL_w (C_i)	R_w (C,C_{tr})
Assembly	51 (-5)	29 (-10)	74 (-3, -8)
Bare Slab	83 (-10)		52 (-1,-5)

Laboratory report available upon request
Test report numbers TS-25-586-08 & TS-25-586-14

Frequency [Hz]	L_n [dB]	
	Bare Slab	Assembly
50	57,9	55,6
63	52,6	53,4
80	59,9	54,2
100	59	50,8
125	60,4	53
160	74,4	55
200	71,8	51,9
250	77,4	52,8
315	74,2	46,2
400	75,3	47,9
500	77,3	45,9
630	75,2	47
800	76,4	45,7
1000	75,8	43,8
1250	76,7	44,1
1600	77,2	43,2
2000	76,9	42,9
2500	77,3	42
3150	77	46,5
4000	76	39,2
5000	73	35

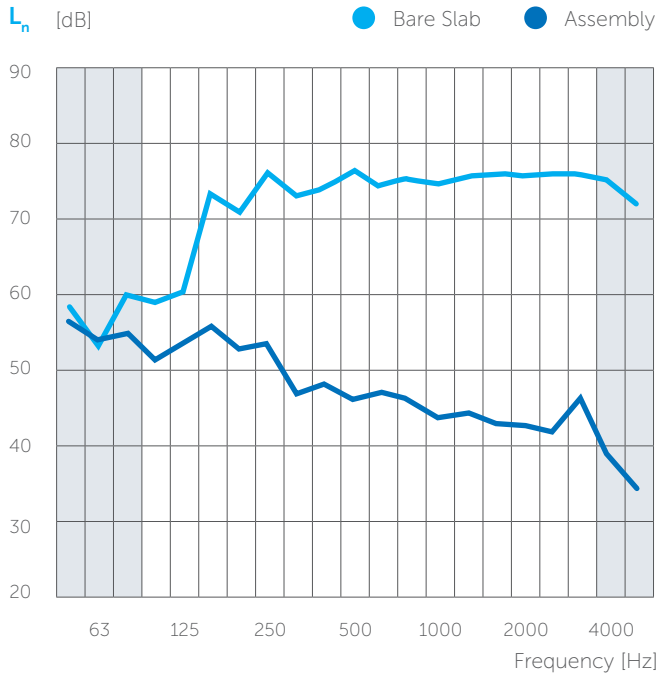

Frequency [Hz]	R [dB]	
	Bare Slab	Assembly
50	42,6	43,1
63	45,3	44,1
80	39,3	45,2
100	41,8	51,1
125	48,2	55,1
160	36,5	54,2
200	41,2	58,6
250	37,8	56,7
315	44,1	69,8
400	46,1	72,6
500	46,9	78,2
630	51,3	79,3
800	51,6	83,7
1000	54,7	87,3
1250	57,1	88,5
1600	59,9	92,3
2000	61,7	96,6
2500	64	97,4
3150	67	96,3
4000	70,6	97
5000	74,9	98,1

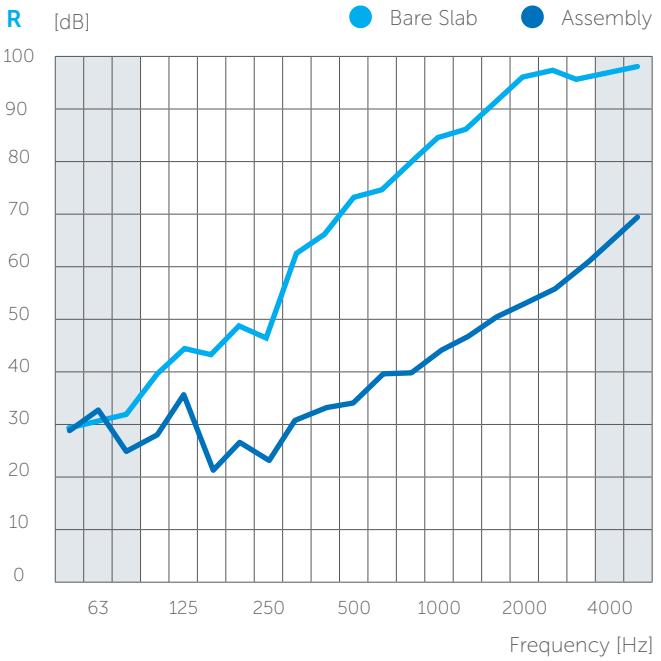

Version 3 | 06/07/2026 - All information provided in this document is subject to legal disclaimers. © 2026 CDM Stravitec nv. All rights reserved.

Test Setup 2

1. 140 mm CLT 5-ply
2. 100 mm void
3. Stravilink CC60-P240[1] clips [on grid of 600 mm x 800 mm]
4. 50 mm mineral wool
5. 2x layers 18 mm gypsum boards

[1]Uses the same elastomeric pads as Stravilink CC40-P

Setup	$L_{n,w}$ (C_i)	ΔL_w (C_i)	R_w (C,C_{tr})
Assembly	56 (-2)	31 (-5)	67 (-2, -7)
Bare Slab	88 (-4)		38 (-1,-3)

Laboratory report available upon request
Test report number AC-23-084-01

Frequency [Hz]	L_n [dB]	
	Bare Slab	Assembly
50	68,2	68
63	69,8	67,4
80	66,1	60,3
100	71	55,6
125	76,5	61,4
160	79,3	58,6
200	81,8	58,4
250	83,9	57,7
315	87,8	59,2
400	88,7	57,4
500	89,2	57,8
630	89,7	56,4
800	89,1	55,3
1000	88,5	54,6
1250	87,8	52,2
1600	85,6	52,3
2000	81,6	50,7
2500	75	42,4
3150	67,2	32,1
4000	62,6	24,8
5000	59,3	18,4

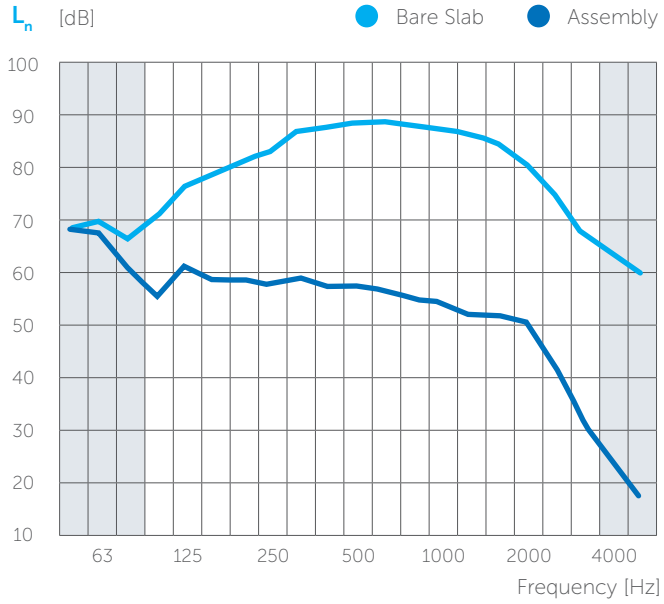

Frequency [Hz]	R [dB]	
	Bare Slab	Assembly
50	28,8	27,5
63	28,8	30,2
80	33,6	40,6
100	28,2	42,9
125	35	51,4
160	31,7	52,7
200	29,3	52,9
250	28,1	54,3
315	28,3	57,7
400	31,8	62,7
500	33,5	65,9
630	34,1	67,6
800	36,9	71,3
1000	39,5	74,3
1250	40,2	76,5
1600	41,8	76,3
2000	43	76,6
2500	44,6	80,5
3150	43,4	81,9
4000	44,1	85,7
5000	45,6	88,5

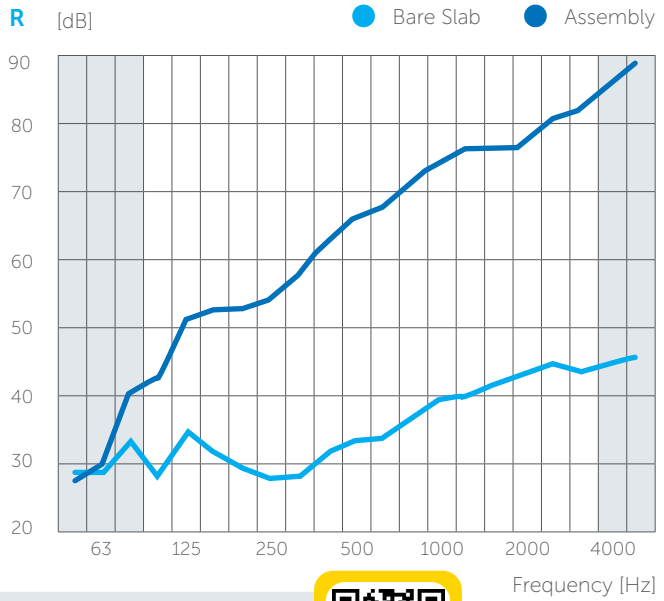

Scan the QR code to access Stravi-dB acoustic data, including reports and editable CSV files.
https://stravi-db.com/

SCAN ME

DISCLAIMER

This information is accurate to the best of our knowledge at the time of issue. Information, data and recommendations provided are based on industry accepted testing and prior product usage. It is intended as descriptive of the general capabilities and performance of our products and does not endorse applicability for any particular project. We reserve the right to change products, performance, and data without notice. This document replaces all information supplied prior to the publication hereof.

REUTENBEEK 9-11, 3090 OVERIJSE, BELGIUM
T +32 2 687 79 07 / INFO@CDM-STRAVITEC.COM / WWW.CDM-STRAVITEC.COM

Version 3 | 06/07/2026 - All information provided in this document is subject to legal disclaimers. © 2026 CDM Stravitec nv. All rights reserved.