cdm stravitec

Making your world a quieter place

TIMBER CONSTRUCTION

ACOUSTICAL SOLUTIONS

Why CDM Stravitec?

Founded in 1951, CDM Stravitec is a family-owned company specialising in building acoustics and structural isolation.

We have remained at the forefront of innovating vibration isolation solutions for buildings and examples of our expertise can be found in landmark buildings all over the world. The solutions that we offer improve the comfort, functionality and safety of buildings whilst also improving quality of life for residents. Our long-standing experience in this field makes us a knowledgeable and reliable partner committed to delivering sustainable noise and vibration isolation solutions.

Our expertise extends to designing isolation systems which are often tailored to specific needs, and wood construction and its acoustical challenges have been treated by our teams and solutions since ever. As an example, we have successfully treated many joist floors and wood framed roofs for conversion projects in several major European cities.

When becomes to more recent techniques, such as cross-laminated timber (CLT), CDM Stravitec started by approaching the new challenges project by project and by carefully collecting data from each successful project we are now able to offer finetuned solutions for optimum results; thus keeping our promise that we would become market leaders in developing a range of building acoustics and structural isolation solutions for timber construction.

Q&E Management

CDM Stravitec nv operates ISO 9001:2015 and ISO 14001:2015 approved quality & environment management systems.

CERTIFIED BY ISO 9001 QUALITY MANAGEMENT VINÇOTTE

CERTIFIED BY ISO 14001 ENVIRONMENTAL MANAGEMENT VINÇOTTE

Design for Disassembly

The traditional model of "Build-Use-Demolish" is slowly succeeded by the concept "Design for disassembly". The objective being to adopt "design with foresight" decisions to facilitate repurposing, retrofitting, reducing waste and extending lifespans.

All CDM Stravitec solutions for timber constructions are developed with this objective in mind.

CDM Stravitec has always understood the importance of R&D and investing in people in order to keep pace with the ever-evolving needs of the building construction industry. We are aware of the challenges and opportunities for improvement along the supply chain i.e. cost effective design, industrialized manufacturing, construction site productivity, material reusability, performance and code compliance; whilst always in harmony with the architectural requirement to make the built environment the best suited for human use in terms of comfort and safety.

We bring to the market our experience to add value to your project and together we are ready to make your world a quieter place.

CDM Stravitec, a Structural Acoustics & Vibration Isolation Technology company.

Why Timber Construction

For a few years now there has been a rise in demand for sustainable buildings, leading to the use of more and more wood constructions due to its ecological advantages.

Timber solutions can be an excellent substitute for more traditional, stiffer and heavier building materials such as concrete and steel, especially when some of their inherent properties aren't required. The use of mass timber[1] products allows for the reduction of the carbon footprint of the built environment while being safe to handle, simple to cut and shape and offering good thermal properties.

It is encouraging to see mass timber becoming a popular choice for construction of modern buildings because we see plenty of evidence around the world to support the fact that it has stood the test of time. As well as offering longevity, its natural warmth brings a certain charm to buildings in much the same way as enjoyed by our ancestors.

From a practical point of view the main advantage of mass timber is the strength-to-weight ratio which allows for lighter constructions that wouldn't be possible with other type building materials. This reduces the overall mass of the building, which in turn offers many other benefits, such as reduced seismic forces and smaller building foundation requirements.

The light, strong nature of wood, together with its malleability to shape it into different geometries and elemental configurations, plus the benefit of a cleaner work environment makes wood an interesting material for off-site manufacturing and improvements in quality control, productivity and cost efficiency. The more prefabricated a building is the simpler the construction process becomes which, in turn, significantly reduces installation time and constructions costs.

As society becomes more aware of the benefits of using sustainable materials and the advantages of this type of construction, we can expect to see an increase in the use of mass timber solutions, including cross-laminated timber (CLT) and other eco-friendly building materials, in construction projects around the world.

The choice of wood construction techniques and systems depends largely on the specifics of the project such as span, load, project size and degree of prefabrication, which are all key parameters when deciding on the right approach to take.

Find more about two of those different construction techniques on the next pages: timber frame structures and cross laminated timber.

(1) Mass timber is a collective term for large and solid wood structural panels used in construction. The most common types of mass timber include cross-laminated timber (CLT), dowel-laminated timber (DLT), nail-laminated timber (NLT), and glue-laminated timber (glulam).

Why Timber Construction

Timber Frame Structures

Timber frame construction system or frame load-bearing wall system is characterised by the creation of load-bearing walls using a frame made up of uprights, which is then filled with insulating material and stiffened with wooden panels.

The frame is generally made of solid wood (wooden beams/dimensional lumber), phalange-jointed wood, I-joist (engineered wood joists), OSB (Oriented Strand Board) or plywood, among other wood materials.

In general, constructions using this technique are therefore easier and quicker to assemble, saving time and resources.

Wooden beams/dimensional lumber

Wooden beams have been an integral part of buildings dating back to the Neolithic era.
In Central Europe, where dimensional lumber has been the floor joist of choice for a long time (due to their low cost, strength, widespread availability, and ease of manipulation) numerous buildings with wood beam floors exist. Nevertheless, the use of this technique does not allow for large spans and can be challenging in terms of sound transmission.

Engineered wood joists (e.g., I-beam)

Engineered floor joists are joists that use engineered wood in conjunction with standard lumber to comprise a more lightweight yet stronger joist than just using traditional lumber. Engineered joists come in several types, from the popular I-beam type to truss-style joists.
When properly blocked, engineered floor joists can span greater distances between bearing points than traditional sawn lumber.
I-beams can come in lengths of up to 18 m being possible to achieve one single-span with engineered I-beams in a new build.

Timber Frame Structures and Its Acoustical Challenges

Around the world there are numerous historically significant buildings with wooden beam floors; however, these structures often fail to meet the acoustic expectations of modern regulations. The lack of adequate impact noise insulation can lead to disturbances and discomfort for occupants living or working in these buildings.

However, replacing such floor constructions is not always feasible due to economic, structural, and legal constraints to preserve these structures to maintain the cultural heritage. Therefore, finding effective retrofit solutions becomes crucial to strike a balance between conserving history and improving the acoustic performance of these buildings.

A solution to improving the sound insulation of existing wooden joist constructions lies in the implementation of floating floors and, if feasible, acoustically decoupled ceilings.

Why Timber Construction

Cross-Laminated Timber (CLT)

Cross-laminated timber (CLT) in large dimensions has advanced at an incredible rate since it was first produced in the 1990s. CLT has become a general-purpose wood product that can be used in all kinds of buildings; often ones with long spans and exciting architecture. It is a product that offers unique opportunities for new design artistry. CLT elements are used in walls, floors and ceilings.

CLT fabrication is highly standardized and an efficient offsite process. This means that while wood varies, materials from the same production facility are consistent. Moreover, because materials are produced off-site structural erection times can be significantly reduced when compared to concrete metal deck/concrete-formed slabs. Complicated details, including pockets/cut-outs for major services/isolation, can be integrated during fabrication according to a standardized and automated production process.

When thinking about such noble and versatil material, different construction techniques may come to mind, such as post-and-beam, panel construction or modular construction.

Post-and-beam

This technique, as opposite to mass timber panel wall system, uses load bearing vertical columns which supports horizontal beams.
Due to the strengths of mass timbers, the columns can be spread allowing for open floor plans, or CLT panels or other types of materials can be used as infill to close the openings.

Panel construction

This technique uses load bearing walls and floors made of mass timber panels that are assembled onsite.
This typology brings important structural redundancy for lateral load, since the shear loads are distributed among several elements on each storey.
This construction allows for compartmentation of rooms without needing to use wall infills.

3D prefabricated modules

This technique consists of producing wooden 3D modules produced offsite. Wooden modules consist of walls, floors and ceilings built as full units and assembled into a self-supporting box which is then connected to other boxes.
Due to increasing time and budget specifications, modular construction methods are gaining more and more ground in the construction industry. This technique implies less work on-site, lower volume of waste on-site and fabrication under controlled conditions.

CLT and Its Acoustical Challenges

While CLT has many advantages as a sustainable building material, it can also pose some rather unique challenges in terms of acoustics.

In North America, the acoustic standards for isolating sound between units range from 50 to 55 and 60, corresponding to entry-level, market-rate, and luxury classifications, respectively. These standards apply to both airborne noise (measured by Sound Transmission Class, or STC) and impact noise (measured by Impact Insulation Class, or IIC). These increasingly stringent requirements are becoming more and more challenging for traditional building materials, but unfortunately, due to its relatively high structural stiffness and low density, cross-laminated timber is even less effective acoustically, resulting in lower airborne and impact sound insulation compared to traditional materials. This is even more challenging when it comes to sound insulation in low frequency ranges, and we can already see the industry reacting in some european countries by introducing on existing acoustical norms new requirements for frequencies as low as 50 Hz.

In CLT constructions vibrational energy is also transmitted from one building part towards another through their common junctions (all construction parts are made of the same material and very often the materials are left exposed) resulting in increased flanking sound transmission

To address this challenge designers and builders need to consider incorporating additional layers of sound insulation or using alternative building materials for areas that require high levels of noise isolation.

Adding non-structural concrete as mass to a CLT structure isn't the optimal solution if the goal is to maintain all CLT benefits previously mentioned and reduce the carbon footprint of the building - although it is an easy way to increase the mass and the overall construction stiffness.

With that in mind, the remaining option to increase the acoustical overall performance is to add isolators. The design and integration of decouplers has to take into account several physical and acoustic performance parameters as well as structural integrity, aesthetics and functionality.
As previously mentioned above, one of the most desired aspects of mass timber construction is the ability to leave a building's structure exposed as finish, which creates the need for asymmetric assemblies. Consequently, when talking about floor/ceiling applications, it is preferable that any acoustic component is installed on top of the assembly. On the other hand, from an acoustic standpoint, it is better to have both top and bottom assemblies - floating floor and dropped ceiling. The upper part would increase impact comfort, but the lower part would have an effect on radiated noise due to footfall impacts.

Acoustical Concepts

Type of noise

Impact Noise

Noise generated by mechanical excitation of the floor structure (e.g., footsteps).
Impact sound insulation in building and of building elements is usually expressed using single figure ratings such as:

IIC: Impact Insulation Class.
LIIC: Low-frequency Impact Insulation Class.
HIIC: High-frequency Impact Insulation Class.
FIIC: Field Impact Insulation Class.
AIIC: Apparent Impact Insulation Class.

Airborne Noise

Noise that is generated in the air and transmitted through the air and structure (e.g., music or conversations).
Airborne sound insulation in building and of building elements is usually expressed using single figure ratings such as:

STC: Sound Transmission Class.
FSTC: Field Sound Transmission Class.
ASTC: Apparent Sound Transmission Class.

Noise transmission paths

In addition to the direct transmission path through the partition element itself, a significant amount of the acoustic energy is transferred via the structural paths.

The sound level results from the sum of the individual transmission paths, being:

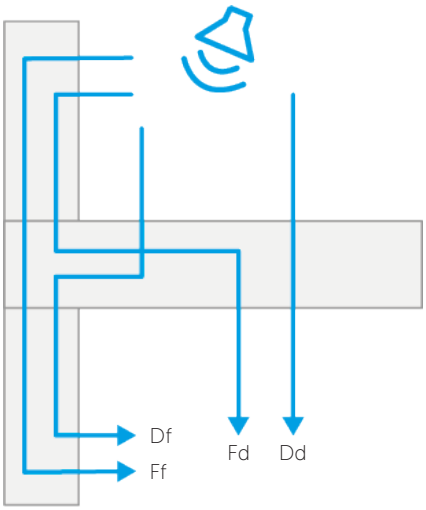

Dd - Direct sound transmission path
Ff, Fd, Df - Flanking sound transmission paths

Image 1 - Different individual transmission paths.

Direct Sound Transmission

Mass timber requires additional insulation or acoustic treatments to block direct sound (Dd) effectively. This can be done on the floor side of the mass timber panels with either wet materials (e.g., concrete, gypcrete, etc.) or dry materials (e.g., thin secondary CLT panels, plywood, chipboards, fiber cement boards, etc.) typically isolated from the mass timber with resilient elements and separated at the suite-demising wall boundaries.

Direct sound transmission can be addressed through the wall by either protecting the mass timber wall panels with insulated partitions or installing exposed double CLT wall panels separated by an insulated air gap.

The same treatments can help to reduce flanking sound transmissions, but the transmission via the indirect paths (Df, Fd, Ff) can also be decreased using flanking sound decoupling solutions.

Indirect Sound Transmission

Decoupling of mass timber panels allows for the introduction of acoustical controls at the panel junctions, with less pressure for isolating sound and vibration directly at the source.

Flanking sound decoupling

The total vibration reduction index, K_{ij}, can be calculated using standard ISO 12354-1 and expresses the attenuation of the vibrational power flow through a junction, playing a key role in sound transmission. Analyzing this standard teaches us that, even when the main separation wall or floor achieves a very high acoustic reduction index, the overall sound isolation between two spaces can be substantially lower when flanking paths are not correctly treated.

The most critical parameter in this calculation is the vibration reduction index K_{ij} which needs to be taken into account for each independent transmission path. In simple words, the higher this K_{ij} value, the better the junction performance and the less that specific junction will contribute to the overall sound transmission.

The last version of norm ISO 12354-1 introduces in Annex F methodologies to determine, within clearly defined limitations, K_{ij} values for T and X junctions in CLT. These formulas are only applicable to rigid connections where metal connectors or elastic decoupling materials are not being used. Significant differences have been noticed between the calculations based on the norm versus measured K_{ij} values in situ.

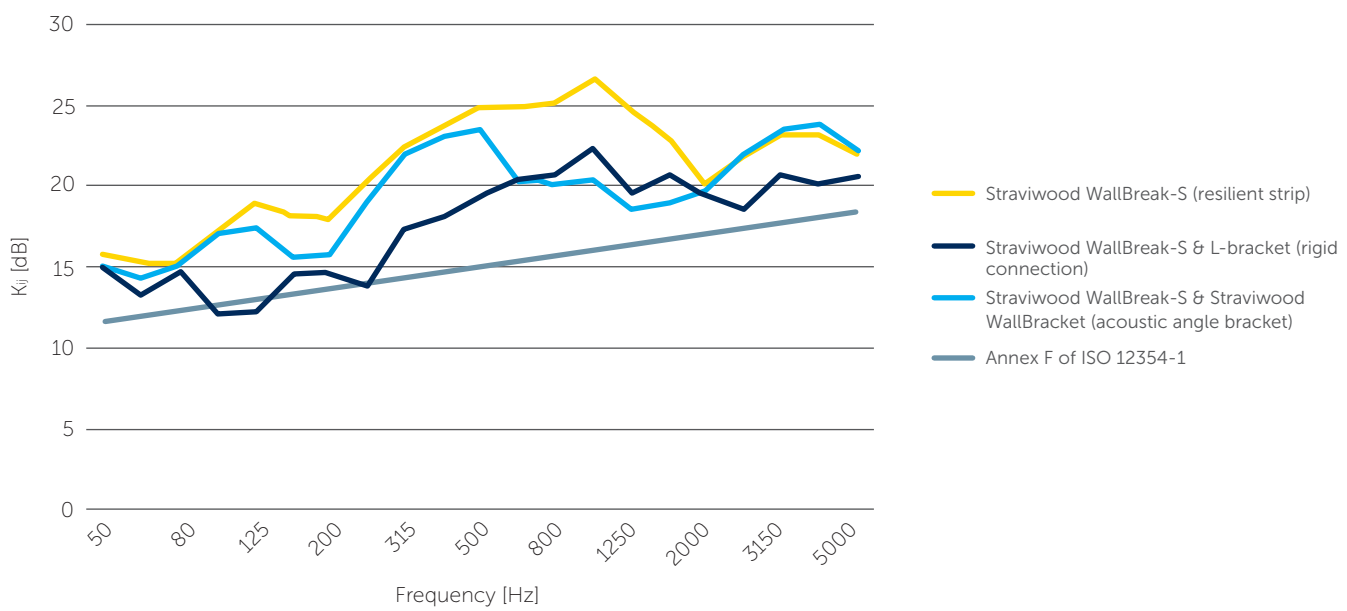

Image 2 - Total vibration reduction index (K_{ij}) of T-junction with different connectors compared to standard values.

Other Relevant Considerations

Mechanical testing/validation

While acoustical decoupling is necessary to reduce the transmission over the flanking paths, it is important to keep in mind that the structural stability and stiffness of the connection needs to be adressed, therefore a balance between structural and acoustical requirements is necessary.

For this purpose, Straviwood timber connections are designed to comply with Eurocode 5 for strength, stiffness, corrosion and fire performance and are validated by testing which are compliant with the relevant European standard protocols and standards.

Our resilient materials are subjected to mechanical tests designed to guarantee structural stability and reliability, while also providing the desired acoustic and vibration decoupling performance.

Image 3 - Mechanical strength test Straviwood ModuLink (bracket for structural joints) in compression (left image) and Straviwood WallBracket (angle bracket for structural joints) in uplift tension (right image).

Acoustic Solution

Timber Frame Structures

Stravifloor Deck is a low-profile acoustical floor system using a proprietary dovetailed metal deck.

Acoustic separation/isolation is achieved by substituting traditional boards with sheets of decking supported on discrete resilient pads or strips.

Image 4 - Stravifloor Deck on wooden joist.

Main Features

- Reduced dead load [concrete toppings as thin as 2'' (50 mm), starting from just 18.8 psf (0.90 kN/m2)]
- Low-profile floating floor [total build-up height from 2-1/2'' (63 mm)]
- High permissible loads
- High impact and airborne sound insulation
- Easy to handle lightweight components
- Easy to incorporate underfloor heating or cooling systems
- Allows for large spans

Extensive testing and validation have confirmed the efficacy of Stravifloor Deck when using pads or strips as resilient support. Multiple buildups were evaluated, encompassing scenarios with suspended ceilings and acoustically isolated ceiling systems, utilizing Stravilink ISH-P hangers as part of the system.

If your project doesn't allow for concrete floating slabs the same performance benefits can be achieved by using **Stravifloor lightweight floating floor** solutions which have been specifically tested on wooden joists with and without ceiling systems.

Image 5 - Stravifloor lightweight floating floor combined with a dropped ceiling using Stravilink ISH-P hangers.

stravidB by CDM Stravitec

Explore an array of valuable resources on our test data platform, Stravi-dB, including detailed test reports and editable .csv files pertaining to Stravifloor and Stravilink assemblies.

Stravi-dB is a free online library that let's you easily find the acoustical test reports you're looking for.

Save time and register today to start comparing different flooor-ceiling assemblies in terms of their performance and immediately access test reports, datasheets, and more.

Acoustic Solutions

CLT — Panel and Post-and-beam

stravifloor by CDM Stravitec

Find test data for various floor-ceiling solutions: official test reports, summary sheets, editable .csv files, datasheets, and much more.

SCAN ME

stravidB by CDM Stravitec

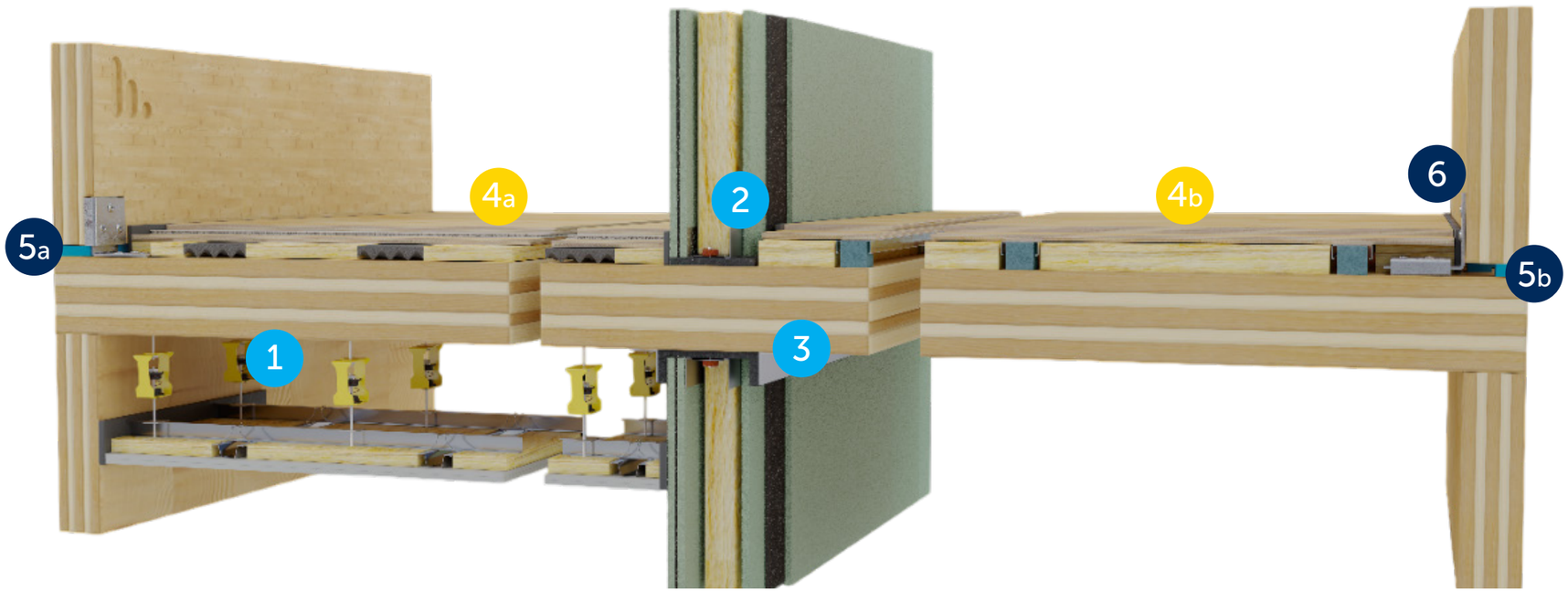

4 Lightweight Stravifloor solutions

Superior sound insulation, for both, airborne sound and impact noise, with no concrete added. These solutions can be designed, using discrete bearings with various thicknesses and/ or different void depths – Stravifloor Channel (4b) – or resilient mats and strips – Stravifloor Mat (4a) – placed between the CLT slab and the different boards layers (e.g., plywood, particle and cementitious boards), with or without the use of constrained layer damping technique (Damping Layer).

Did you know?

You can comply with the new edition of the Belgium standard NBN S 01-400-1 by using lightweight Stravifloor solutions on CLT slabs and keeping the wooden ceiling exposed.
This standard sets acoustic criteria for both, airborne and impact noise sound insulation, for residential buildings, introducing requirements to frequencies as low as 50 Hz.

1 Stravilink ICH-S

Isolation ceiling hanger with springs designed to support suspended ceiling systems.

+ *To be seen, not heard*

2 Stravilink WallFix

An isolated wall system used to increase the acoustic performance of internal partition walls, the system comprises of a metal runner with isolation strip and elastomer washers to fix the horizontal runner to the floor and ceiling.

3 Stravilink RHD

A resilient head detail isolating the head connection of a dry or wet wall from the construction above whilst also providing lateral restraint.

stravilink by CDM Stravitec

Other Stravilink solutions for both, suspended ceilings and walls, are available and can be used on mass timber construction. The solutions presented in this brochure are just examples, part of a more complete range of products.

For more about Stravilink

SCAN ME

5 Straviwood WallBreak

Wall-floor decoupling solution, designed to minimize flanking transmissions. This solution is available as strips [Straviwood WallBreak-S (5a)] when continuous load transfer on the slab is required or as elastomeric pads [Straviwood WallBreack-P (5b)] when discontinuous load transfer on the slab is allowed.

Image 6 - Straviwood WallBreak-S/P.

Straviwood SlabFix

The flood/roof-slab connection can be acoustically decoupled using the Straviwood SlabFix, a customizable design available upon request.

straviwood by CDM Stravitec

For more about Straviwood solutions, including datasheets and installation manuals, visite the related solution page on www.cdm-stravitec.com

For more about Straviwood

SCAN ME

6 Straviwood WallBracket

An acoustical angle bracket for structural joints for reduction of flanking sound transmissions.

Features:

- Easy and reliable pre-compression system (check image 9).
- Minimum installation time, because of reduced number of screws.
- Full decoupling of rigid contact during building services that enhances sound insulation performance.
- Enhanced ultimate limit state (ULS) strength via rigid blocking system.
- Two different installation orientations possible.

Image 7 - Straviwood WallBracket different installation orientations.

1 - Place the bracket

2 - Drive screws on the isolator side until the stabilizer touches wood

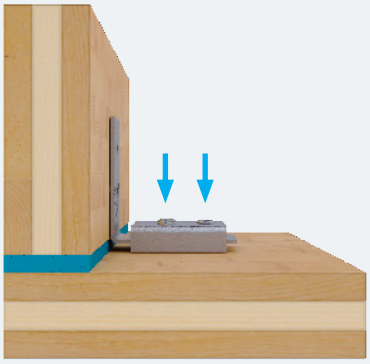

3 - Drive screws on the bare plate side

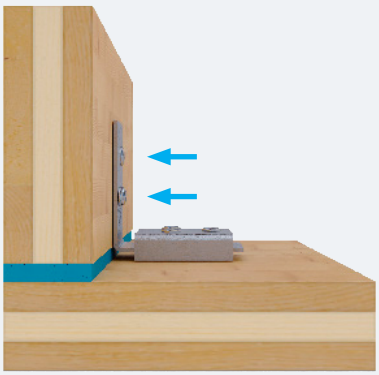

Image 9 - Straviwood WallBracket installation steps, showing pre-compression system, designed to avoid over-compression.

stravibase
by CDM Stravitec

Various Stravibase solutions may be suited for wood construction if a building base isolation strategy is required. For more information about our Stravibase solutions, please visit www.cdm-stravitec.com

For more about Stravibase

SCAN ME

Acoustic Solutions

CLT — 3D Prefabricated Modules

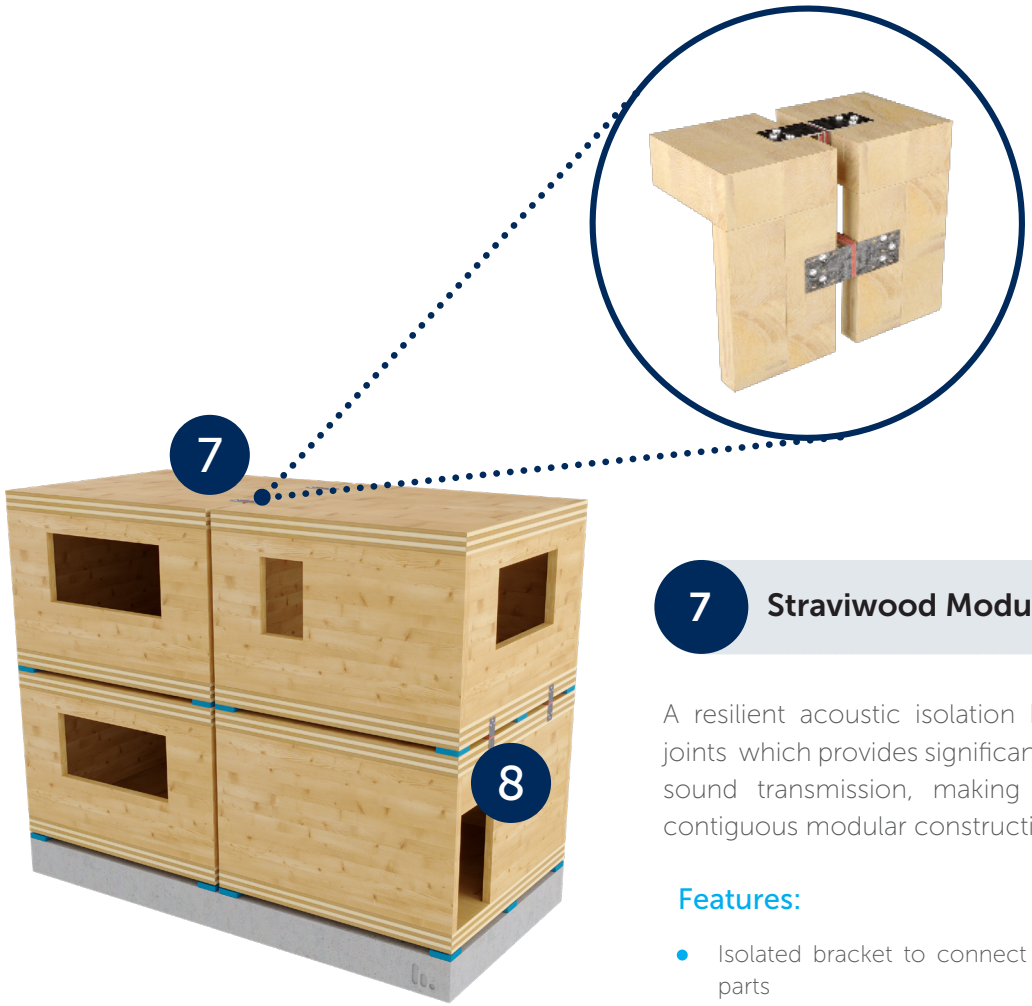

7 Straviwood ModuLink

A resilient acoustic isolation bracket for structural joints which provides significant reduction in flanking sound transmission, making it ideal to connect contiguous modular constructions.

Features:

- Isolated bracket to connect adjacent modular CLT parts
- Standard solutions and custom designed solutions per type of 3D prefabricated modules and depending on loadings

8 Straviwood ModuBreak

Resilient pads specially designed to acoustically decouple stacked building modules, minimizing flanking sound transmissions, improving the vibration and structural noise isolation by isolating contact between modules throughout the building.

Features:

- Resilient pads to decouple stacked 3D CLT modules
- Custom design allows for the alignment of stacked modules

Case Studies

At CDM Stravitec we are proud of our track record in successfully addressing noise and vibration isolation challenges related to timber construction. With a legacy dating back to 1951 our portfolio boasts many accomplished projects. Our project diversity spans commercial and residential structures, manufacturing facilities, medical centers, educational institutions, hospitality establishments, fitness centers, and a variety of others.

Rotterdam (NL)
Straviwood WallBreak-S
Straviwwod WallBracket

Brussels (BE)
Stravifloor Channel
Stravilink WallBatten

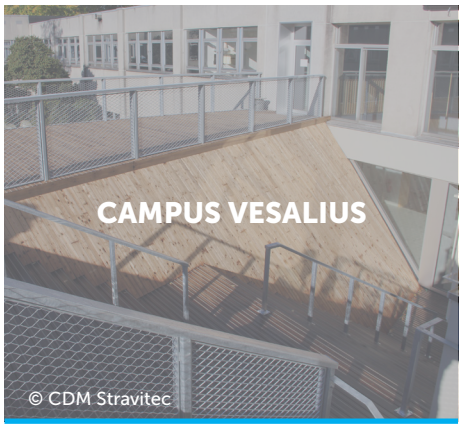

Ghent (BE)
Stravifloor Batten
Stravilink WallBatten

Gemert (NL)
Straviwood ModuLink
Straviwood WallBracket
Straviwood WallBreak-P

Alkmaar (NL)
Straviwood ModuLink
Straviwood ModuBreak

Brussels (BE)
Stravifloor Channel

Making your world a quieter place

We have qualified engineers in noise and vibration based at different locations around the world – they are only a phone call away.

For general enquiries please contact our head office or visit our website.

Canada
Toronto
T (905) 265-7401
info-ca@cdm-stravitec.com
www.cdm-stravitec.com

United States
Lancaster
T (888) 454-6236
info-us@cdm-stravitec.com
www.cdm-stravitec.com

Version 1 | 08/04/2024 - © 2024 CDM Stravitec n.v. All rights reserved.

DISCLAIMER

This information is accurate to the best of our knowledge at the time of issue. Information, data and recommendations provided are based on industry accepted testing and prior product usage. It is intended as descriptive of the general capabilities and performance of our products and does not endorse applicability for any particular project. We reserve the right to change products, performance, and data without notice. This document replaces all information supplied prior to the publication hereof.
The renders and details present on this document are intended solely for illustration purposes only. The actual components of the final solution may undergo variations, intricately adjusted to the unique details of each project.